Working Together for
a Greener Society

Future of Power Electronics and the Earth

A Selection Guide to Power Management ICs

- Power ICs for PWM Switching Power Supply Control
- LLC Current-resonant Switching Power Supply Control ICs
- Quasi-resonant (QR) Switching Power Supply Control ICs
- Critical Conduction Mode (CRM) PFC Control ICs

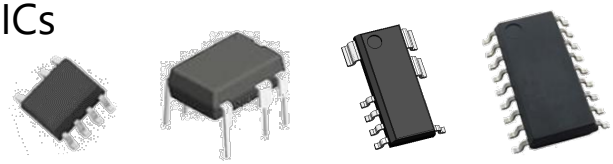

All information in this guide is as of the date of publication. Please make sure that you are using the latest version of the guide.
If you need more product information, please refer to our data sheets.
https://www.sanken-ele.co.jp/en

Contents

Power Management ICs: 4 Product Families

This selection guide covers our power management ICs, including functions and characteristics, by product family.

Power ICs for PWM Switching Power Supply Control

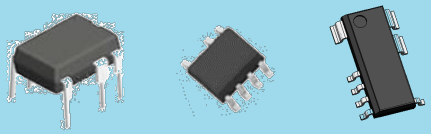

LLC Current-resonant Switching Power Supply Control ICs

Quasi-resonant (QR) Switching Power Supply Control ICs

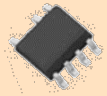

Critical Conduction Mode (CRM) PFC Control ICs

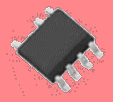

Features: Power ICs for PWM Switching Power Supply Control

1. Green Mode (Reduced Oscillation Frequency)

Lowers standby power by the reduced oscillation frequency at medium load and the burst oscillation operation at light load.

✓ **Increases the efficiency at 25–75% loads**

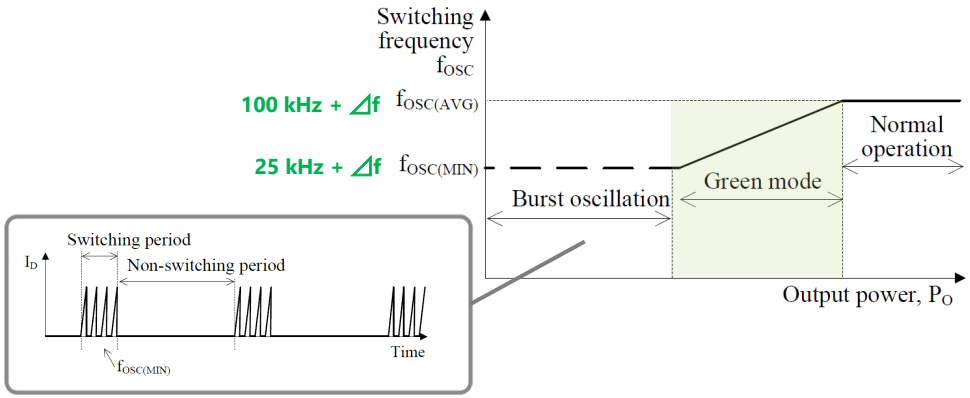

2. Step Drive Control (Reduced Secondary Diode Loss)

Optimizes the power MOSFET gate drive control according to loads.

✓ **Decreases a surge voltage in the secondary rectifier diode at MOSFET turn-off**

✓ **Decreases the breakdown voltage and V_F loss (higher power supply efficiency)**

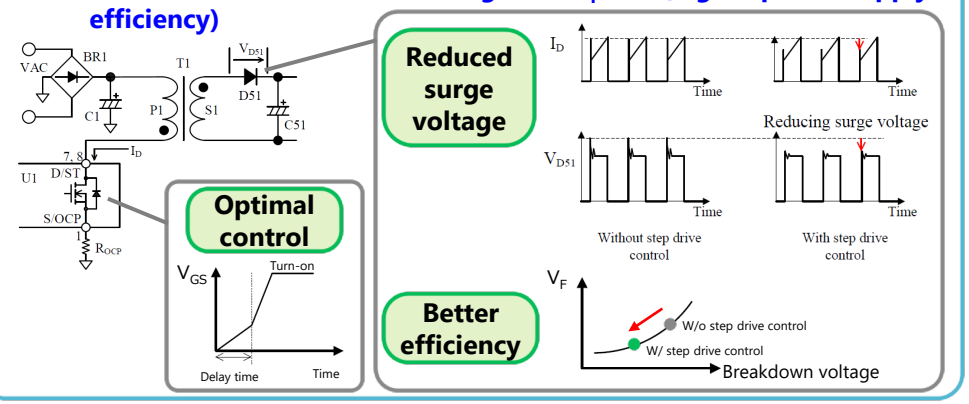

3. AC Input High-voltage Protection (HVP)

Stops oscillations on a pulse-by-pulse basis upon overvoltage input to the AC power supply.

✓ **Protects power MOSFETs against overvoltage damage**

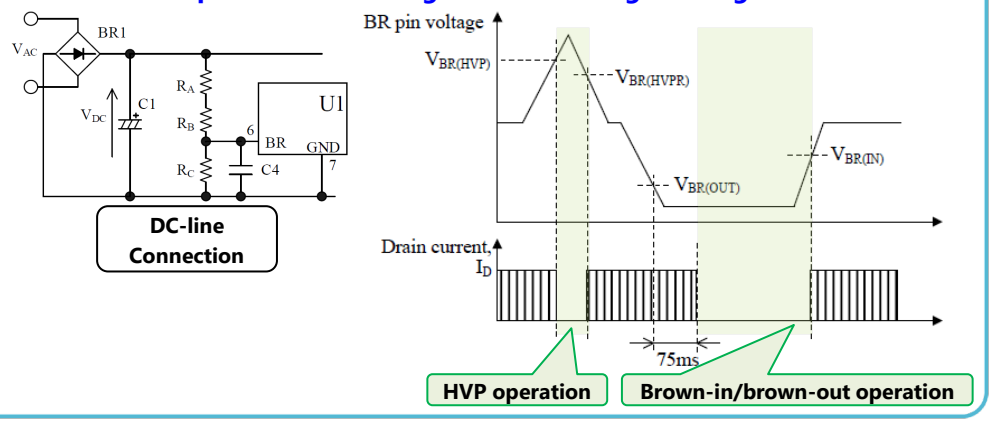

4. Standby Operating Point Adjustment

Adjusts the standby operating point by connecting R_{BA} to the BA pin.

✓ **Decreases the power consumption during standby**

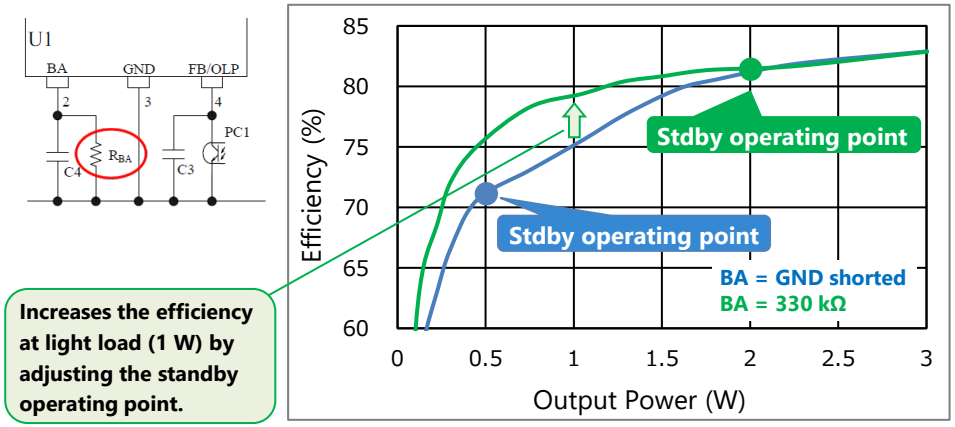

Increases the efficiency at light load (1 W) by adjusting the standby operating point.

Features: LLC Current-resonant Switching Power Supply Control ICs

1. PFC On/Off Function

Powers on/off the PFC control IC (recommended: SSC2016S) in synchronization with the standby operation.
Allows circuits to consist of fewer external components.
✓ **Decreases the power consumption at light load or during standby**

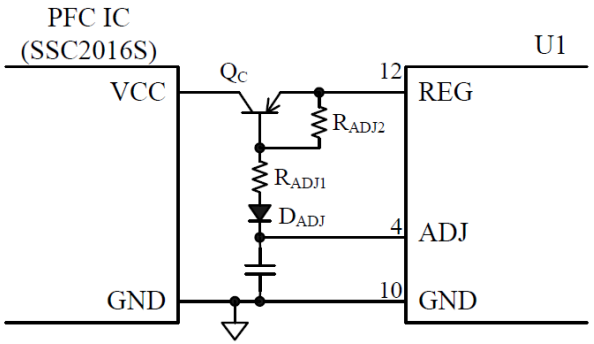

2. Standby Function

Performs the burst oscillation during the standby operation.
✓ **Decreases the switching loss at light load**

The soft-on/soft-off function prevents drain currents from varying steeply during the burst oscillation.
Controls switching frequencies with the SB pin voltage during the burst oscillation.
✓ **Minimizes audible transformer noise**

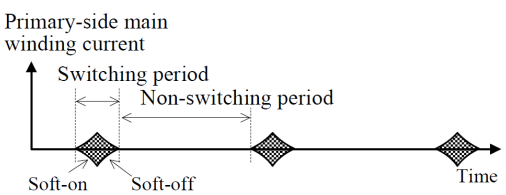

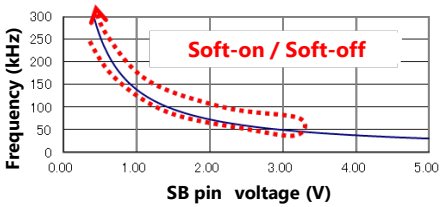

3. Automatic Dead Time Adjustment Function

Detects a voltage-resonant period to automatically control the zero voltage switching (ZVS) operations of the high- and low-side power MOSFETs.
✓ **Requires no dead time adjustment**

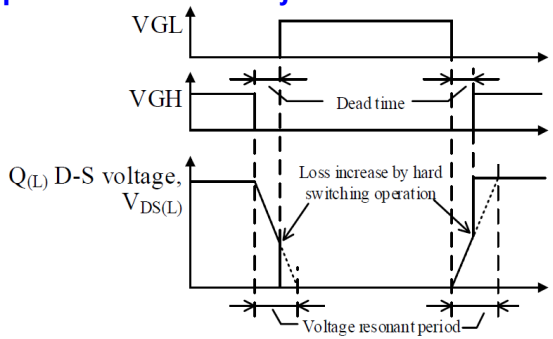

Waveforms at ZVS Failure

4. X-capacitor Discharge Function

Requires no discharge resistor R_{DIS} (IEC62368-1 compliant).
A typical line filter configuration needs R_{DIS} that is connected to an X-capacitor in parallel and is always power-consuming.
✓ **Increases circuit efficiencies**

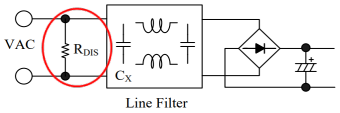

Typical Line Filter Circuit

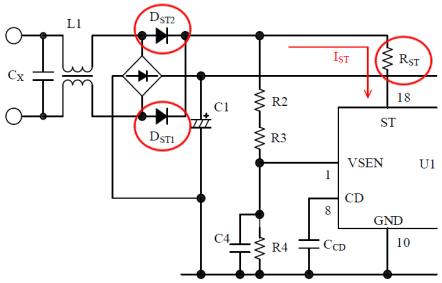

R_{DIS} removed; D_{ST1}, D_{ST2}, R_{ST} connected to the ST pin.

Features: Quasi-resonant (QR) Switching Power Supply Control ICs

1. Bottom-skip Function

Minimizes an increase in switching frequency to reduce switching loss at light to medium loads.

✓ Decreases the power consumption at light to medium loads

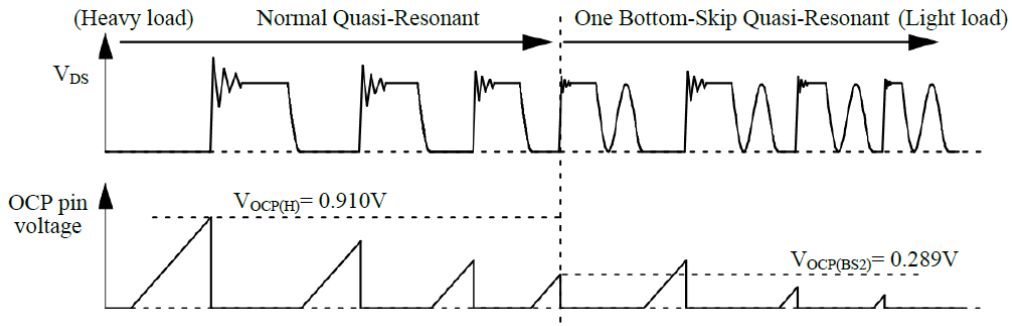

2. Automatic Standby Mode Function

Performs the burst oscillation by automatically shifting to the standby mode when the drain current I_D decreases at light load.

✓ Decreases the power consumption at light load or during standby

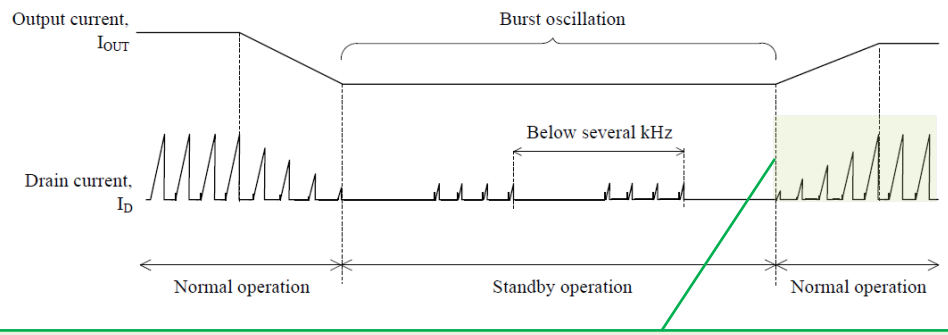

The step-on burst oscillation function (that gradually expands an on-time) can minimize audible transformer noise.

Features: Critical Conduction Mode (CRM) PFC Control ICs

1. Configuration without Auxiliary Winding

Based on the inductor current detection method.

✓ **Allows a circuit design using a single-wound inductor**

✓ **Reduces costs with fewer external components**

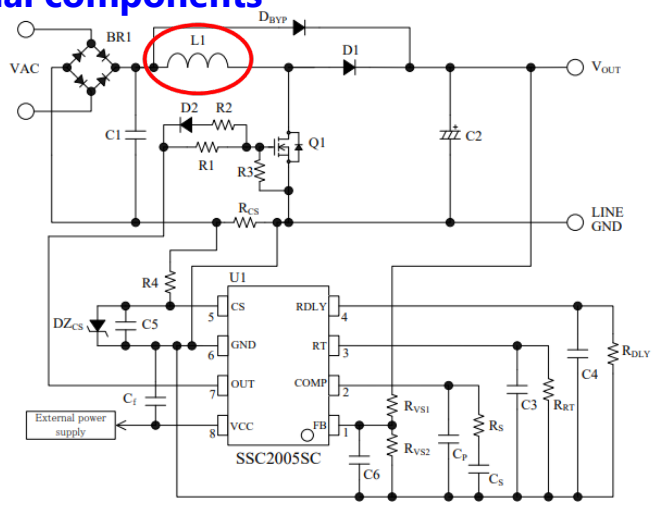

2. Maximum Switching Frequency Limitation Function

Limits the oscillation frequency (f_{MAX} = 300 kHz) to suppress switching loss.

✓ **Decreases the power consumption at light load or during standby**

3. Restart Circuit

Turns on the OUT pin when the OUT pin off-time continues for the restart time (t_{RS} = 220 µs or more).
This restart operation takes the OUT pin on-time, $t_{ON(RS)}$ = 1.7 µs.

✓ **Stabilizes the switching operation at startup or light load**

Selection Guide to Power Supply ICs by Application

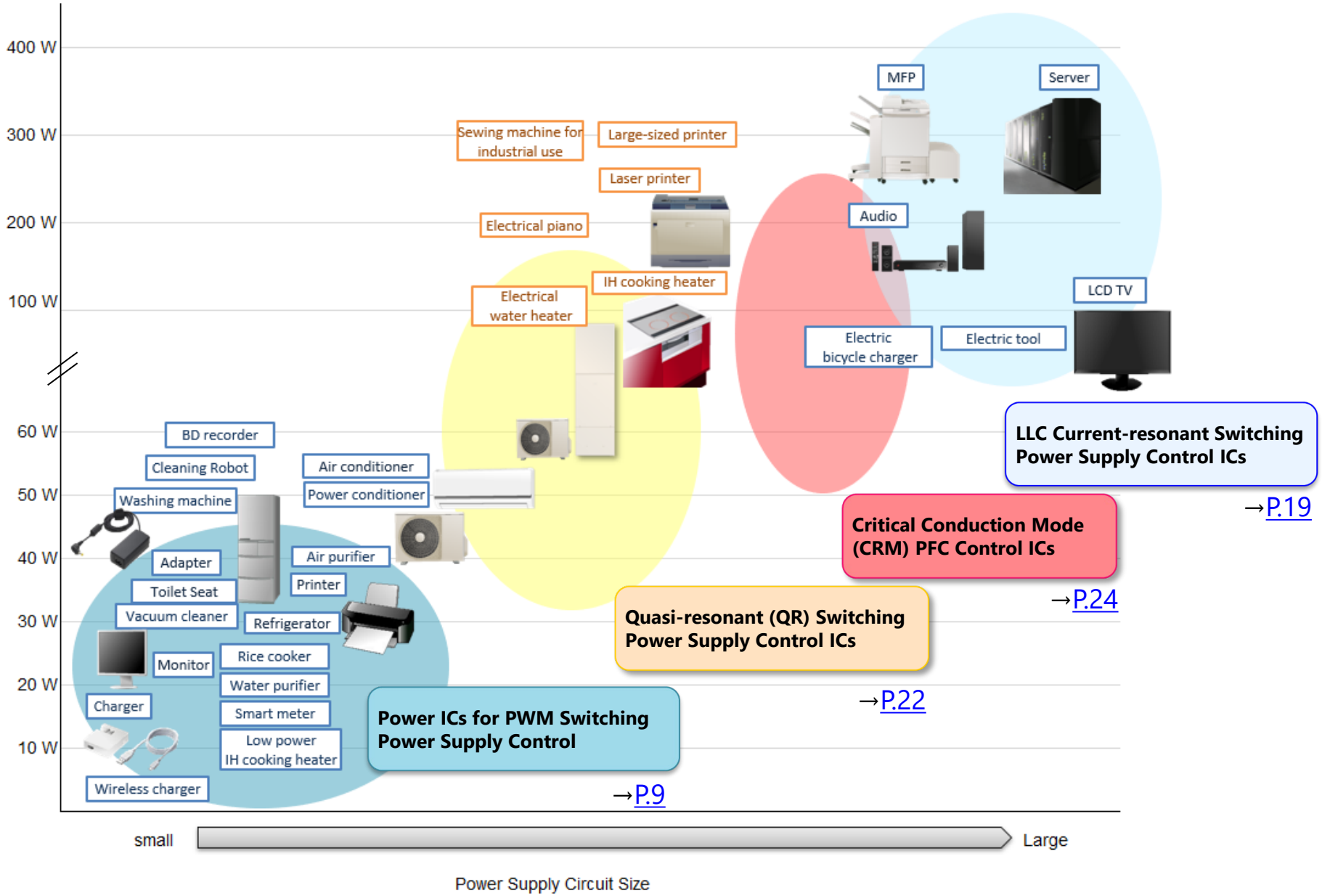

Selection Guide: Power ICs for PWM Switching Power Supply Control

Application	Output Power (W) (10 / 20 / 30 / 40 / 50～ / 80)	Package	Feature	Series Name	Page
• Large Home Appliance • AC/DC Adopter  		DIP8	• Built-in 700 V startup circuit • Ultra-low standby power (standby operating point adj. + green mode)	STR6A100xV STR6A100xVD	P.11
		DIP8	• Built-in 700 V startup circuit • Ultra-low standby power (green mode) • Brown-in/brown-out function	STR6A100HZ	
		SOIC16	• Built-in 700 V startup circuit • Ultra-low standby power (green mode) • AC input high-voltage protection (HVP) • Brown-in/brown-out function	STR6S161HXD	
		DIP8	• Built-in 700 V startup circuit • General-purpose type • Fixed frequency (67 kHz / 100 kHz) • Brown-in/brown-out function	STR-A6000xZ	P.15
		DIP8	• Built-in 800 V (max.) startup circuit • Ultra-low standby power (green mode) • Power DIP8 (Po ≤ 44 W)	STR3A450 STR3A460HL/HDL STR3A475HDL	P.12
		DIP8	• Built-in 650 V startup circuit • General-purpose type • Power DIP8 (Po ≤ 44 W) • Fixed frequency (67 kHz / 100 kHz)	STR3A250	P.13
		TO220F-6L	• Built-in 700 V startup circuit • Ultra-low standby power (green mode) • AC input high-voltage protection (HVP) • Brown-in/brown-out function	STR3W400MXD	P.18

Selection Guide: Power ICs for PWM Switching Power Supply Control

Application	Output Power (W)	Package	Feature	Series Name	Page
• Small Home Appliance 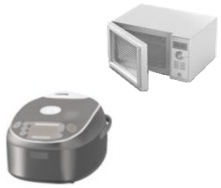	10 20 30 40 50	DIP8 SOIC8	• Built-in 730 V startup circuit • Built-in overcurrent detection resistor • Fixed frequency (67 kHz / 100 kHz)	STR4A160	P.14
		DIP8	• Built-in 730 V startup circuit • Primary-side regulation (w/o optocoupler) • Built-in overcurrent detection resistor	STR5A160D	P.16
		DIP8 SOIC8	• Built-in 700 V startup circuit • Ultra-low standby power (green mode) • Built-in error amplifier	STR5A450D STR5A460	P.17

STR6A/STR6S Series

● Package

DIP8

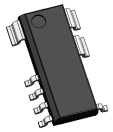

SOIC16

● Typical Application

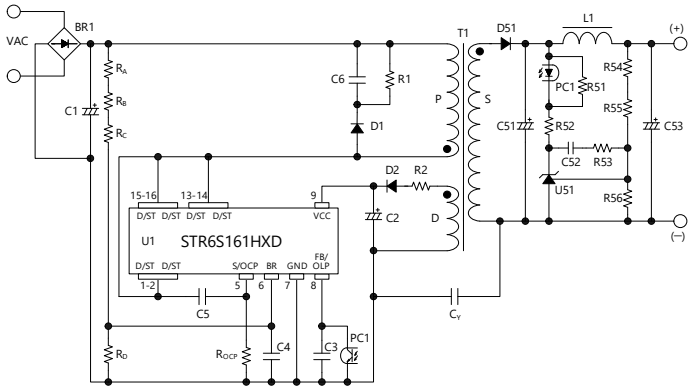

● Recommended Diode

Category	Part Number	Characteristics
Fast Recovery Diode	SJPX-F2	200 V, 1.5 A
Schottky Diode	SJPE-L15	150 V, 3 A
	SJPE-T15	150 V, 5 A
Snubber Diode	SARS05	800 V, 1 A

● Product List

Series Name	Part Number	V_{DSS} (Min.)	$R_{DS(ON)}$ (Max.)	$f_{OSC(AVG)}$ (Typ.)	$f_{OSC(MIN)}$ (Typ.)	Green Mode	Step Drive Control	Standby Operating Point Adj	Brown-in/Brown-out	HVP	OVP TSD	$V_{CC(OVP)}$ (Min.)	OLP	OCP	$V_{OCP(H)}$ (Typ.)	Current Detection Resistor	Package
STR6A100xV STR6A100xVD	STR6A153MV	650 V	1.9 Ω	65 kHz	25 kHz	✓	✓	✓	—	—	Latch	27.0 V	Auto-restart	Pulse-by-pulse	0.888 V	External	DIP8
	STR6A153MVD										Auto-restart						
	STR6A168HV	700 V	10 Ω	100 kHz	25 kHz	✓	✓	✓	—	—	Latch	27.0 V	Auto-restart	Pulse-by-pulse	0.888 V	External	DIP8
	STR6A168HVD		10 Ω								Auto-restart						
	STR6A169HVD		6 Ω								Auto-restart						
	STR6A161HV		3.95 Ω								Latch						
	STR6A161HVD		3.95 Ω								Auto-restart						
	STR6A163HVD		2.3 Ω								Auto-restart						
	STR6A124MV		1.4 Ω	65 kHz	25 kHz						Latch						
STR6A100HZ	STR6A169HZ	700 V	6 Ω	100 kHz	25 kHz	✓	✓	—	✓	—	Latch	27.0 V	Auto-restart	Pulse-by-pulse	0.888 V	External	DIP8
	STR6A161HZ		3.95 Ω														
	STR6A163HZ		2.3 Ω														
STR6S161HXD	STR6S161HXD	700 V	3.95 Ω	100 kHz	25 kHz	✓	✓	—	✓	✓	Auto-restart	27.0 V	Auto-restart	Pulse-by-pulse	0.888 V	External	SOIC16

STR3A450 Series

● Package

DIP8

● Typical Application

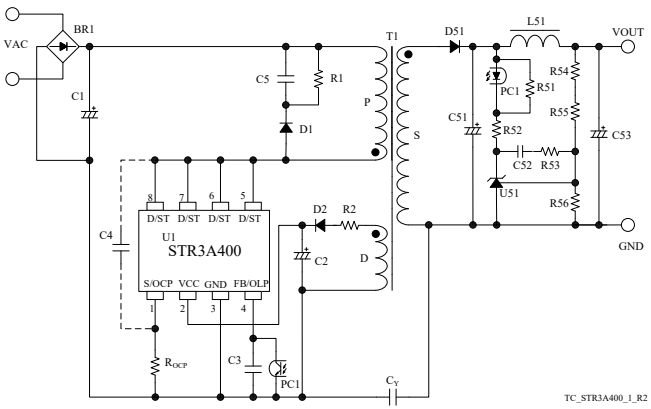

● Recommended Diode

Category	Part Number	Characteristics
Fast Recovery Diode	SJPX-F2	200 V, 1.5 A
Schottky Diode	SJPE-L15	150 V, 3 A
	SJPE-T15	150 V, 5 A
Snubber Diode	SARS05	800 V, 1 A

● Product List

Series Name	Part Number	V_{DSS} (Min.)	$R_{DS(ON)}$ (Max.)	$f_{OSC(AVG)}$ (Typ.)	$f_{OSC(MIN)}$ (Typ.)	Green Mode	Step Drive Control	OVP TSD	$V_{CC(OVP)}$ (Min.)	OLP	OCP	$V_{OCP(H)}$ (Typ.)	$V_{OCP(LEB)}$ (Typ.)	Current Detection Resistor
STR3A450	STR3A451	650 V	4 Ω	65 kHz	30 kHz	✓	✓	Latch	27.0 V	Auto-restart	Pulse-by-pulse	0.888 V	1.69 V	External
	STR3A451D		4 Ω					Auto-restart						
	STR3A453		1.9 Ω					Latch						
	STR3A453D		1.9 Ω					Auto-restart						
	STR3A455		1.1 Ω					Latch						
	STR3A455D		1.1 Ω					Auto-restart						
STR3A460HL/HDL	STR3A461HDL	700 V	4.2 Ω	100 kHz	30 kHz	✓	✓	Auto-restart	27.0 V	Auto-restart	Pulse-by-pulse	0.888 V	1.69 V	External
	STR3A461HL		4.2 Ω					Latch						
	STR3A462HDL		3.2 Ω					Auto-restart						
	STR3A463HDL		2.2 Ω					Auto-restart						
STR3A475HDL	STR3A475HDL	800 V	1.7 Ω	100 kHz	30 kHz	✓	✓	Auto-restart	27.0 V	Auto-restart	Pulse-by-pulse	0.888 V	1.69 V	External

STR3A250 Series

● Package

DIP8

● Typical Application

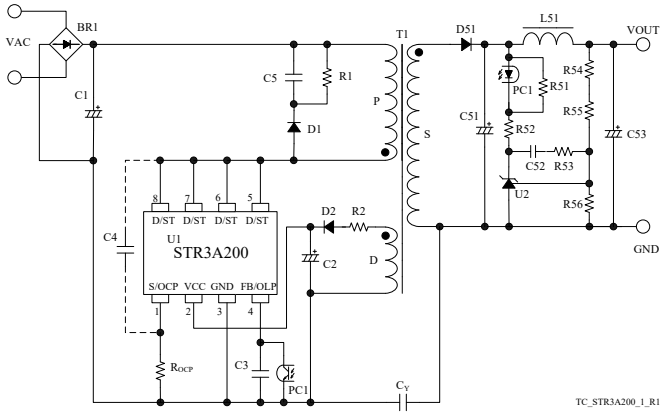

● Recommended Diode

Category	Part Number	Characteristics
Fast Recovery Diode	SJPX-F2	200 V, 1.5 A
	SJPL-F4	400 V, 1.5 A
	SJPL-L4	400 V, 3 A
Snubber Diode	SARS05	800 V, 1 A

● Product List

Series Name	Part Number	V_{DSS} (Min.)	$R_{DS(ON)}$ (Max.)	$f_{OSC(AVG)}$ (Typ.)	$f_{OSC(MIN)}$ (Typ.)	OVP TSD	$V_{CC(OVP)}$ (Min.)	OLP	OCP	$V_{OCP(H)}$ (Typ.)	$V_{OCP(LEB)}$ (Typ.)	Current Detection Resistor
STR3A250	STR3A251	650 V	4 Ω	67 kHz	—	Latch	27.0 V	Auto-restart	Pulse-by-pulse	0.888 V	1.69 V	External
	STR3A251D		4 Ω			Auto-restart						
	STR3A253		1.9 Ω			Latch						
	STR3A253D		1.9 Ω			Auto-restart						
	STR3A255		1.1 Ω			Latch						
	STR3A255D		1.1 Ω			Auto-restart						

STR4A160 Series

● Package

DIP8

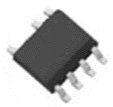

SOIC8

● Typical Application

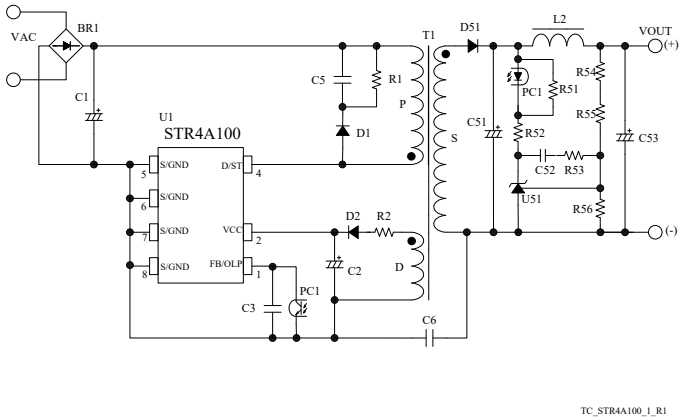

● Recommended Diode

Category	Part Number	Characteristics
Fast Recovery Diode	SJPX-F2	200 V, 1.5 A
	SJPL-F4	400 V, 1.5 A
Snubber Diode	SARS05	800 V, 1 A

● Product List

Series Name	Part Number	V_{DSS} (Min.)	$R_{DS(ON)}$ (Max.)	$f_{OSC(AVG)}$ (Typ.)	$f_{OSC(MIN)}$ (Typ.)	OVP TSD	$V_{CC(OVP)}$ (Min.)	OLP	OCP	Current Detection Resistor	Package
STR4A160	STR4A162D	730 V	24.6 Ω	65 kHz	—	Auto-restart	27.5 V	Auto-restart	Pulse-by-pulse	Built-in	DIP8
	STR4A162S		24.6 Ω	65 kHz							SOIC8
	STR4A164D		12.9 Ω	65 kHz							DIP8
	STR4A164HD		12.9 Ω	100 kHz							DIP8

STR-A6000xZ Series

● Package

DIP8

● Typical Application

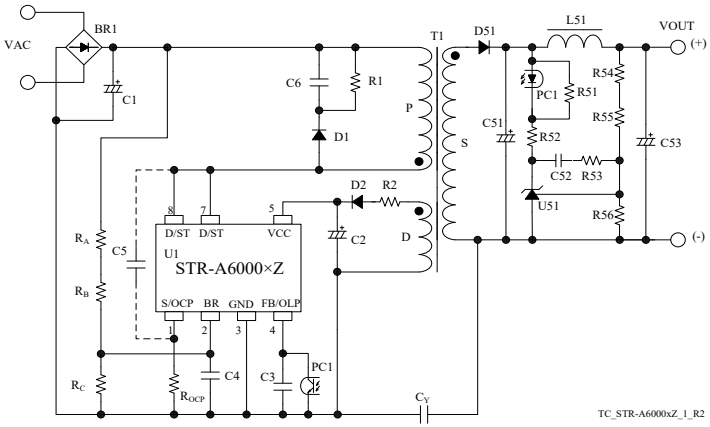

● Recommended Diode

Category	Part Number	Characteristics
Fast Recovery Diode	SJPX-F2	200 V, 1.5 A
	SJPL-F4	400 V, 1.5 A
	SJPL-L4	400 V, 3 A
Snubber Diode	SARS05	800 V, 1 A

● Product List

Series Name	Part Number	V_{DSS} (Min.)	$R_{DS(ON)}$ (Max.)	$f_{OSC(AVG)}$ (Typ.)	$f_{OSC(MIN)}$ (Typ.)	OVP TSD	$V_{CC(OVP)}$ (Min.)	OLP	OCP	$V_{OCP(H)}$ (Typ.)	$V_{OCP(LEB)}$ (Typ.)	Current Detection Resistor
STR-A6000xZ	STR-A6069HZ	700 V	6 Ω	100 kHz	—	Auto-restart	27 V	Auto-restart	Pulse-by-pulse	0.888 V	1.69 V	External
	STR-A6069MZ		6 Ω	67 kHz								
	STR-A6061HZ		3.95 Ω	100 kHz								
	STR-A6061MZ		3.95 Ω	67 kHz								
	STR-A6063MZ		2.3 Ω	100 kHz								
	STR-A6063HZ		2.3 Ω	67 kHz								

STR5A160D Series

● Package

DIP8

● Typical Application

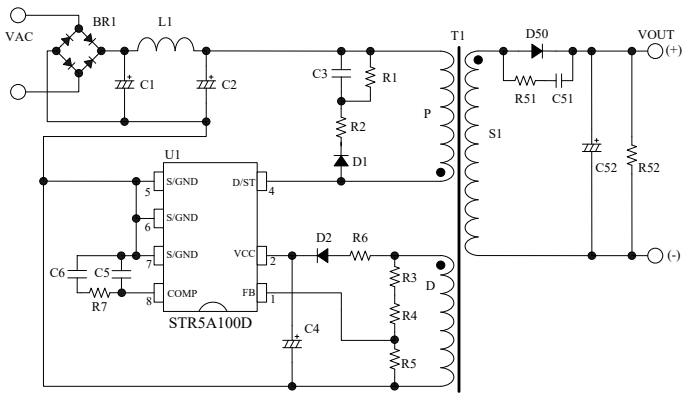

● Recommended Diode

Category	Part Number	Characteristics
Fast Recovery Diode	SJPX-F2	200 V, 1.5 A
	SJPL-F4	400 V, 1.5 A
Snubber Diode	SARS05	800 V, 1 A

● Product List

Series Name	Part Number	V_{DSS} (Min.)	$R_{DS(ON)}$ (Max.)	$f_{OSC(AVG)}$ (Typ.)	$f_{OSC(MIN)}$ (Typ.)	Green Mode	OVP TSD	$V_{CC(OVP)}$ (Min.)	OLP	OCP	Current Detection Resistor
STR5A160D	STR5A162D	730 V	24.6 Ω	65 kHz	23 kHz	✓	Auto-restart	27.5 V	Auto-restart	Pulse-by-pulse	Built-in
	STR5A164D		13 Ω								

STR5A400 Series

● Package

DIP8

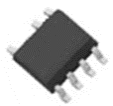

SOIC8

● Typical Application

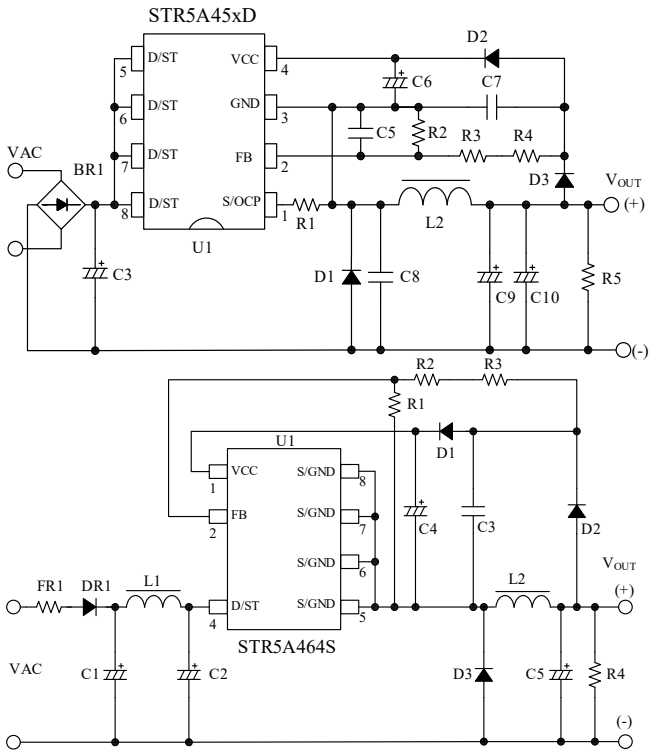

● Recommended Diode

Category	Part Number	Characteristics
General Rectifier Diode	EM1C	1000 V, 1 A
Fast Recovery Diode	SJPL-H6	600 V, 2 A
	SJPD-D5	500 V, 1 A
Schottky Diode	SJPB-D9	90 V, 1 A

● Product List

Series Name	Part Number	V_{DSS} (Min.)	$R_{DS(ON)}$ (Max.)	$f_{OSC(AVG)}$ (Typ.)	$f_{OSC(MIN)}$ (Typ.)	Green Mode	OVP TSD	$V_{CC(OVP)}$ (Min.)	OLP	OCP	Error Amplifier	Current Detection Resistor	Package
STR5A450D	STR5A451D	650 V	4.0 Ω	60 kHz	23 kHz	✓	Auto-restart	27.5 V	Auto-restart	Pulse-by-pulse	✓	External	DIP8
	STR5A453D		1.9 Ω										DIP8
STR5A460	STR5A464D	700 V	13.6 Ω	60 kHz	23 kHz	✓	Auto-restart	27.5 V	Auto-restart	Pulse-by-pulse	✓	Built-in	DIP8
	STR5A464S												SOIC8

STR3W400MXD Series

● Package

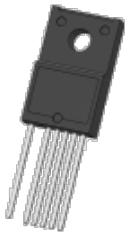

TO220F-6L

● Typical Application

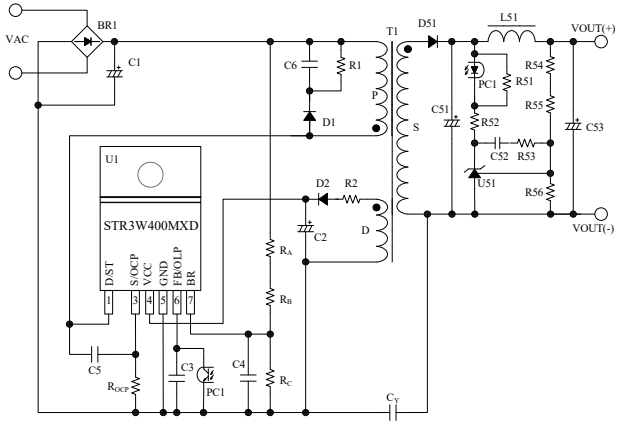

● Recommended Diode

Category	Part Number	Characteristics
Fast Recovery Diode	SJPX-F2	200 V, 1.5 A
	SJPL-F4	400 V, 1.5 A
	FMES-21010	100 V, 10A
	FMEN-210B	150 V, 10A
Snubber Diode	SARS05	800 V, 1 A

● Product List

Series Name	Part Number	V_{DSS} (Min.)	$R_{DS(ON)}$ (Max.)	$f_{OSC(AVG)}$ (Typ.)	$f_{OSC(MIN)}$ (Typ.)	Green Mode	Step Drive Control	Brown-in/ Brown-out	HVP	OVP TSD	$V_{CC(OVP)}$ (Min.)	OLP	OCP	$V_{OCP(H)}$ (Typ.)	$V_{OCP(LEB)}$ (Typ.)	Current Detection Resistor
STR3W 400MXD	STR3W422MXD*	700 V	2.8 Ω	65 kHz	30 kHz	✓	✓	✓	✓	Auto-restart	29.1 V	Auto-restart	Pulse-by-pulse	0.888 V	1.69 V	External
	STR3W424MXD		1.4 Ω													
	STR3W426MXD*		1.0 Ω													

* Under development

Type 1: External Auxiliary Power Supply

◆To minimize standby power (P_{IN} ≤ 30 mW)

- **SSC3S931**
- **SSC3S932**

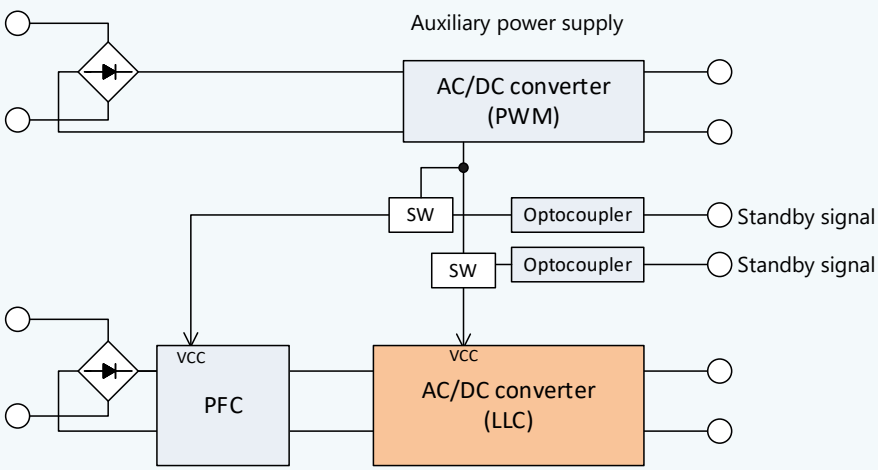

Type 2: Built-in Standby Function

◆To minimize the number of external components

- **SSC3S900**
- **SSC3S910**
- **SSC3S927L**
- **SSC3S937**

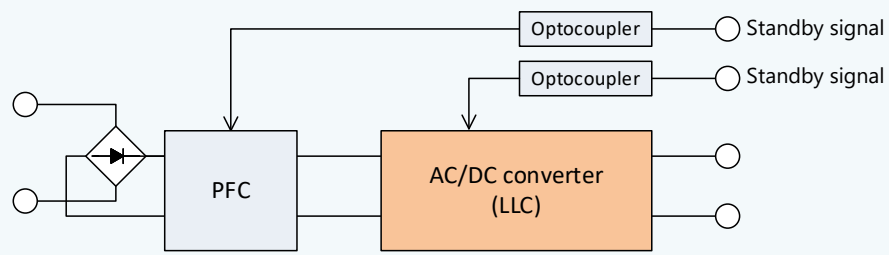

- **SSC3S921**
- **SSC3S927**

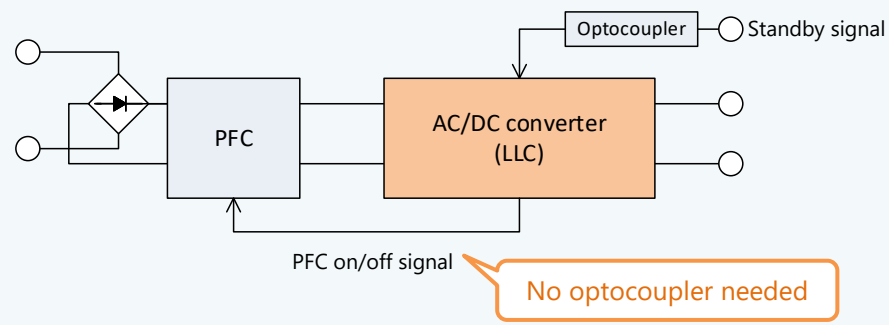

Application	Output Power (W)	Package	Feature*	Part Number	Page
• Digital Appliance • Office Automation • Industrial • Communication • Audiovisual  	10 30 50 100 250 500	SOP18	• Built-in 600 V startup circuit • Universal input voltage supported (OLP input compensation) • Input Capacitor Discharge Function	SSC3S901 SSC3S902 SSC3S910	P.20
		SOP18	• Built-in 600 V startup circuit • PFC on/off function • Audible transformer noise suppression in standby mode • Input Capacitor Discharge Function	SSC3S921	
		SOP18	• Built-in 600 V startup circuit • PFC on/off function • X-capacitor discharge function • AC input high-voltage protection (HVP)	SSC3S927	
		SOP18	• Built-in 600 V startup circuit • X-capacitor discharge function • AC input high-voltage protection (HVP)	SSC3S927L	
		SOP18	• Built-in 600 V startup circuit • X-capacitor discharge function • Input Capacitor Discharge Function • AC input high-voltage protection (HVP)	SSC3S937	
		SOP18	• External auxiliary power supply • DC input high-voltage protection (HVP) • Optocoupler open protection (OOP)	SSC3S931 SSC3S932	

* Control method: Harf-bridge

SSC3S900 Series

● Package

SOP18

● Typical Application

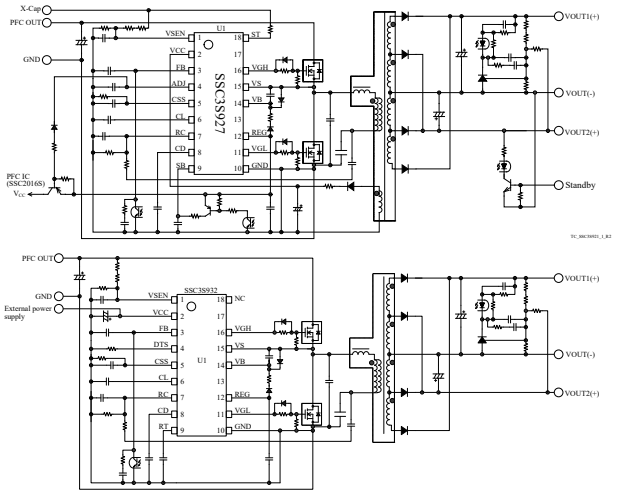

● Recommended Diode

Category	Part Number	Characteristics
Fast Recovery Diode	SJPX-F2	200 V, 1.5 A
Schottky Diode	SJPA-D3	30 V, 1 A
	FMW-4306	60 V, 30 A
	FMEN-230A	100 V, 30 A

● Product List

* With input compensation function

Part Number	V_{ST} (Min.)	f_{MIN} (Typ.)	f_{MAX} (Typ.)	$I_{FB(MAX)}$ (Typ.)	PFC On/Off Function	X-capacitor Discharge Function	Input capacitor Discharge Function	HVP	OVP TSD	$V_{CC(OVP)}$ (Min.)	OLP	OCP
SSC3S901	600 V	32 kHz	300 kHz	-195 µA	—	—	✓	—	Auto-restart	29.5 V	Auto-restart*	Pulse-by-pulse
SSC3S902	600 V	32 kHz	300 kHz	-195 µA	—	—	✓	—	Latch	29.5 V	Latch*	Pulse-by-pulse
SSC3S910	600 V	32 kHz	300 kHz	-195 µA	—	—	✓	—	Auto-restart	30.0 V	Auto-restart*	Pulse-by-pulse
SSC3S921	600 V	31.5 kHz	300 kHz	-195 µA	✓	—	✓	—	Auto-restart	30.0 V	Auto-restart	Pulse-by-pulse
SSC3S927	600 V	31.5 kHz	300 kHz	-195 µA	✓	✓	—	✓	Auto-restart	30.0 V	Auto-restart	Pulse-by-pulse
SSC3S927L	600 V	31.5 kHz	300 kHz	-195 µA	—	✓	—	✓	Auto-restart	30.0 V	Auto-restart	Pulse-by-pulse
SSC3S937	600 V	31.5 kHz	300 kHz	-195 µA	—	✓	✓	✓	Auto-restart	30.0 V	Auto-restart	Pulse-by-pulse
SSC3S931	—	31.5 kHz	300 kHz	-1600 µA	—	—	—	✓	Latch	30.0 V	Latch	Pulse-by-pulse
SSC3S932	—	31.5 kHz	300 kHz	-1600 µA	—	—	—	✓	Latch/ Auto-restart	30.0 V	Latch/ Auto-restart	Pulse-by-pulse

Application	Output Power (W)						Package	Feature	Series Name	Page
	10	30	50	100	250	500				
• Digital Appliance • Office Automation • Large Home Appliance • Industrial • Communication							SOIC8	• Built-in 600 V startup circuit • Bottom-skip function (higher efficiency at light to medium loads) • Automatic standby mode function (higher efficiency with burst oscillation at light load)	SSC1S310A	P.23

SSC1S310A Series

● Package

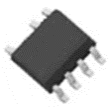

SOIC8

● Typical Application

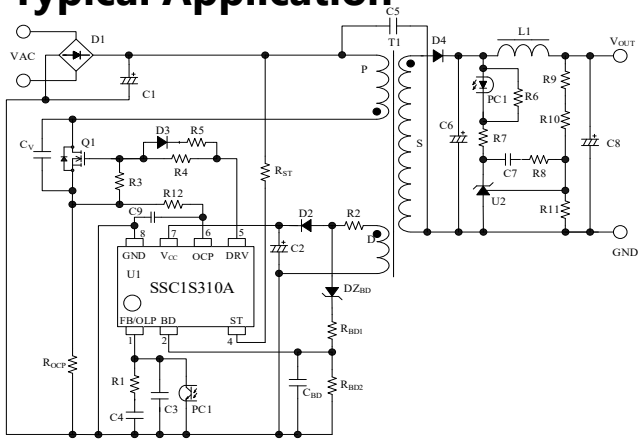

● Recommended Diode

Category	Part Number	Characteristics
Fast Recovery Diode	SJPX-F2	200 V, 1.5 A
	SJPL-L4	400 V, 3 A
	FMX-22SL	200 V, 15A
	FMEN-210B	150V, 10A
Schottky Diode	SJPA-D3	30 V, 1 A
Snubber Diode	SARS05	800 V, 1 A

● Product List

Series Name	Part Number	V_{ST} (Min.)	OVP TSD	$V_{CC(OVP)}$ (Min.)	OLP	OCP
SSC1S310A	SSC1S311A	600 V	Auto-restart	28.5 V	Auto-restart	Pulse-by-pulse
	SSC1S312A	600 V	Latch	28.5 V	Latch	Pulse-by-pulse

Selection Guide: Critical Conduction Mode (CRM) PFC Control ICs

Application	Output Power (W)						Package	Feature	Series Name	Page
	10	30	50	100	250	500				
• Digital Appliance • Office Automation • AC/DC Power Supply • Communication 							SOIC8	• Configuration without auxiliary winding (inductor current detection method) • Low standby power consumption • Minimum off-time limitation function (curbed frequency increases)	SSC2005SC	P.25
							SOIC8	• Low standby power consumption • Maximum oscillation frequency limitation function • Maximum on-time limitation function (reduced audible transformer noise in a transient state)	SSC2016S	

SSC2000 Series

● Package

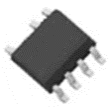

SOIC8

● Typical Application

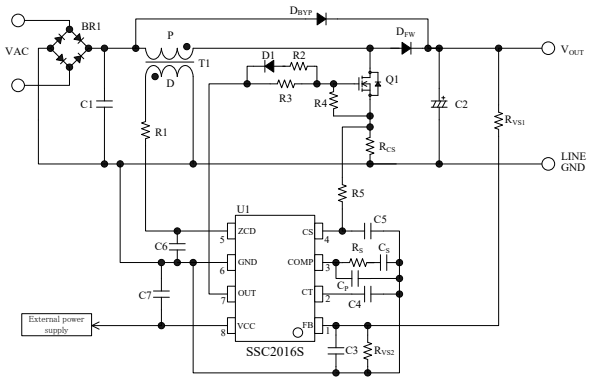

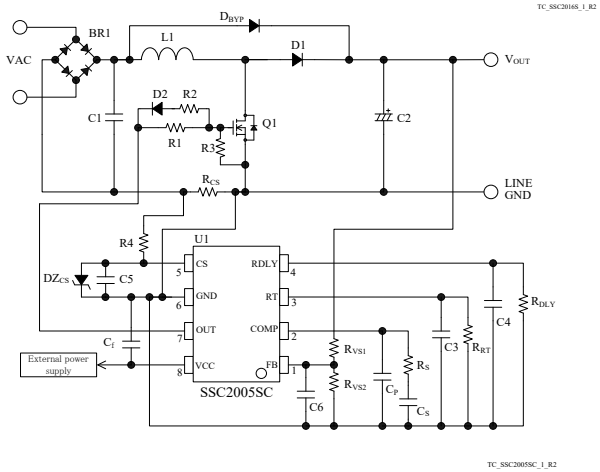

● Recommended Diode

Category	Part Number	Characteristics
General Rectifier Diode	EM2A	600 V, 1.2 A
Fast Recovery Diode	FMNS-1106S	600 V, 10 A
Schottky Diode	SJPA-D3	30 V, 1 A

● Product List

Part Number	f_{MAX} (Typ.)	FB_UVP (FB Pin Undervoltage Protection)	OVP TSD	OCP1	$V_{CS(OCP1)}$ (Typ.)
SSC2016S	300 kHz	✓	Auto-restart	Pulse-by-pulse	0.5 V
SSC2005SC	—	✓	Auto-restart	Pulse-by-pulse	-0.6 V

Design Support Tools

Our design support tools will boost your productivity and save your time.

Off-line Converter Design Support Tool

Sanken STR Pro

Power Supply Design Examples

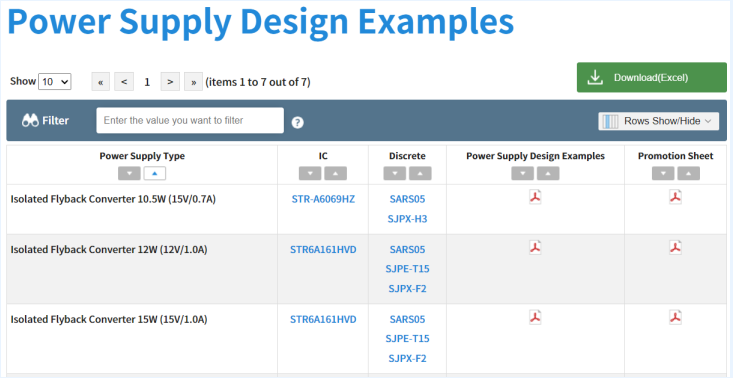

Power Supply Design Examples

Show 10 « < 1 > » (items 1 to 7 out of 7) Download(Excel)

Filter Enter the value you want to filter Rows Show/Hide

Power Supply Type	IC	Discrete	Power Supply Design Examples	Promotion Sheet
Isolated Flyback Converter 10.5W (15V/0.7A)	STR-A6069HZ	SARS05 SJPX-H3		
Isolated Flyback Converter 12W (12V/1.0A)	STR6A161HVD	SARS05 SJPE-T15 SJPX-F2		
Isolated Flyback Converter 15W (15V/1.0A)	STR6A161HVD	SARS05 SJPE-T15 SJPX-F2		

Cross Reference

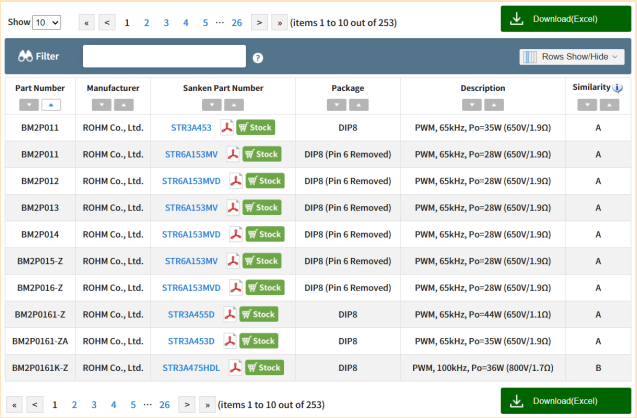

Show 10 « < 1 2 3 4 5 ··· 26 > » (items 1 to 10 out of 253) Download(Excel)

Filter Rows Show/Hide

Part Number	Manufacturer	Sanken Part Number	Package	Description	Similarity
BM2P011	ROHM Co., Ltd.	STR3A453 Stock	DIP8	PWM, 65kHz, Po=35W (650V/1.9Ω)	A
BM2P011	ROHM Co., Ltd.	STR6A153MV Stock	DIP8 (Pin 6 Removed)	PWM, 65kHz, Po=28W (650V/1.9Ω)	A
BM2P012	ROHM Co., Ltd.	STR6A153MVD Stock	DIP8 (Pin 6 Removed)	PWM, 65kHz, Po=28W (650V/1.9Ω)	A
BM2P013	ROHM Co., Ltd.	STR6A153MV Stock	DIP8 (Pin 6 Removed)	PWM, 65kHz, Po=28W (650V/1.9Ω)	A
BM2P014	ROHM Co., Ltd.	STR6A153MVD Stock	DIP8 (Pin 6 Removed)	PWM, 65kHz, Po=28W (650V/1.9Ω)	A
BM2P015-Z	ROHM Co., Ltd.	STR6A153MV Stock	DIP8 (Pin 6 Removed)	PWM, 65kHz, Po=28W (650V/1.9Ω)	A
BM2P016-Z	ROHM Co., Ltd.	STR6A153MVD Stock	DIP8 (Pin 6 Removed)	PWM, 65kHz, Po=28W (650V/1.9Ω)	A
BM2P0161-Z	ROHM Co., Ltd.	STR3A455D Stock	DIP8	PWM, 65kHz, Po=44W (650V/1.1Ω)	A
BM2P0161-ZA	ROHM Co., Ltd.	STR3A453D Stock	DIP8	PWM, 65kHz, Po=35W (650V/1.9Ω)	A
BM2P0161K-Z	ROHM Co., Ltd.	STR3A475HDL Stock	DIP8	PWM, 100kHz, Po=36W (800V/1.7Ω)	B

« < 1 2 3 4 5 ··· 26 > » (items 1 to 10 out of 253) Download(Excel)

Sanken STR Pro

Sanken STR Pro is a design support tool intended for off-line converter circuits.
Once you have entered your desired power supply specs, the tool auto-creates a circuit diagram, a bill of materials, and a transformer spec sheet.
You can reduce the total amount of development workloads more than ever.

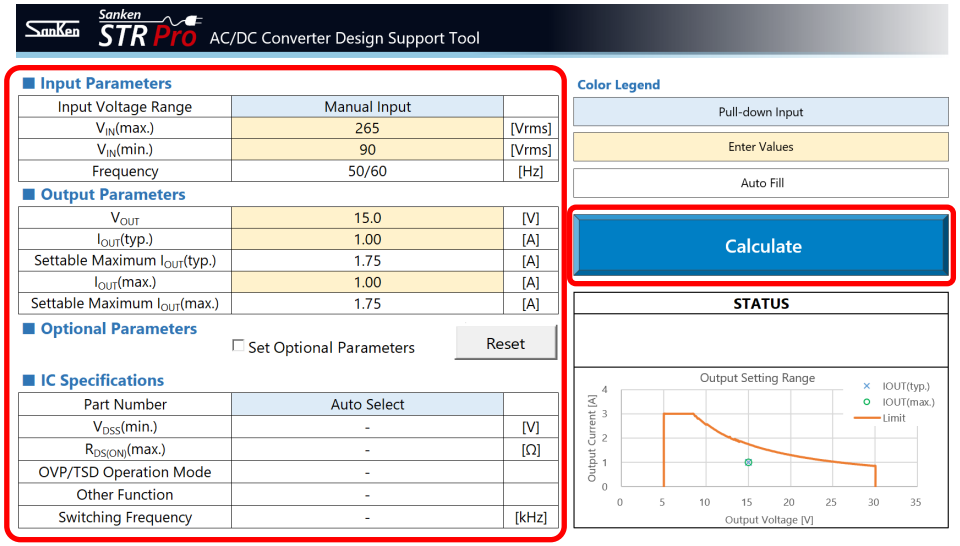

Sanken STR Pro Special Page

Go to the special page and download it now!

Circuit Diagram

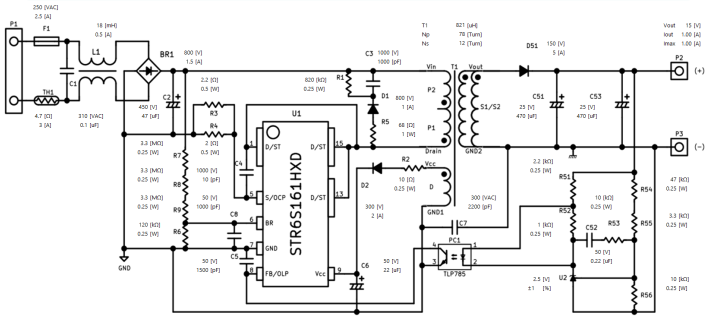

Bill of Materials

■Bill of Material | Output Parameters, Vout:15[V], Iout_typ:1[A], Iout_max:1[A]

Reference	Category	Rating	Manufacturer	Reference model number	Remarks
F1	Fuse	250[VAC]2.5[A]	-	-	Safety standard product
TH1	Thermister	4.7[Ω]3[A]	-	-	-
C1	Film capacitor	310[VAC]0.1[uF]	-	-	X2-Safety Class
C2	Electrolytic capacitor	450[V]47[uF]	-	-	High ripple current product
C3	Chip Ceramic Capacitor	1000[V]1000[pF]	-	-	-
C4	Chip Ceramic Capacitor	1000[V]10[pF]	-	-	-
C5	Chip Ceramic Capacitor	50[V]1500[pF]	-	-	-
C6	Electrolytic capacitor	50[V]22[uF]	-	-	-
C7	Ceramic Capacitor	300[VAC]2200[pF]	-	-	X1Y1 Class
C8	Chip Ceramic capacitor	50[V]1000[pF]	-	-	-
C51	Electrolytic capacitor	25[V]470[uF]	-	-	Low impedance product
C52	Chip Ceramic Capacitor	50[V]0.22[uF]	-	-	-
C53	Electrolytic capacitor	25[V]470[uF]	-	-	Low impedance product
BR1	Bridge Diode	800[V]1.5[A]	-	-	-
D1	Snubber Diode	800[V]1[A]	Sanken	SARS05	-
D51	Schottky Diode	150[V]5[A]	Sanken	SJPE-T15	-
D2	Fast Recovery Diode	300[V]2[A]	Sanken	SJPX-H3	-
L1	Line Filter	18[mH]0.5[A]	-	-	-
T1	Transformer	EI22	-	-	-

Transformer Spec Sheet

Transformer Design

1. Specifications of Power Supply

AC input voltage	AC 90 [V] ~ AC 265 [V]
Frequency	50 / 60Hz
Total output power	15.0W(Thermal rating)
	15.0W(Peak load)

2. Target Value of Calculation

IC	STR6S161HXD
Average input current	0.16 A
Peak switching current	0.656 A
Max. on duty	48.7 %
IC control type	PWM 100kHz

3. Transformer Specifications

Core material / size	PC40 / EI22
Center gap thickness (Ref.)	0.53 mm
AL – value	135 nH/N^2
Lp – value	821 μH

Power Supply Design Examples

Our power supply design examples for off-line converters are available on our website.

Power Supply Design Examples

Show 10 « < 1 > » (items 1 to 7 out of 7)

Download(Excel)

Filter Enter the value you want to filter

Rows Show/Hide

Power Supply Type	IC	Discrete	Power Supply Design Examples	Promotion Sheet
Isolated Flyback Converter 10.5W (15V/0.7A)	STR-A6069HZ	SARS05 SJPX-H3		
Isolated Flyback Converter 12W (12V/1.0A)	STR6A161HVD	SARS05 SJPE-T15 SJPX-F2		
Isolated Flyback Converter 15W (15V/1.0A)	STR6A161HVD	SARS05 SJPE-T15 SJPX-F2		

***Power Supply Design Examples* Special Page**

Cross Reference

Our website has the Cross Reference page, a search page to find a compatible (alternative or replacement) product from our off-line converter ICs.

Show 10 « < 1 2 3 4 5 ··· 26 > » (items 1 to 10 out of 253) Download(Excel)

Filter Rows Show/Hide

Part Number	Manufacturer	Sanken Part Number	Package	Description	Similarity
BM2P011	ROHM Co., Ltd.	STR3A453 Stock	DIP8	PWM, 65kHz, Po=35W (650V/1.9Ω)	A
BM2P011	ROHM Co., Ltd.	STR6A153MV Stock	DIP8 (Pin 6 Removed)	PWM, 65kHz, Po=28W (650V/1.9Ω)	A
BM2P012	ROHM Co., Ltd.	STR6A153MVD Stock	DIP8 (Pin 6 Removed)	PWM, 65kHz, Po=28W (650V/1.9Ω)	A
BM2P013	ROHM Co., Ltd.	STR6A153MV Stock	DIP8 (Pin 6 Removed)	PWM, 65kHz, Po=28W (650V/1.9Ω)	A
BM2P014	ROHM Co., Ltd.	STR6A153MVD Stock	DIP8 (Pin 6 Removed)	PWM, 65kHz, Po=28W (650V/1.9Ω)	A
BM2P015-Z	ROHM Co., Ltd.	STR6A153MV Stock	DIP8 (Pin 6 Removed)	PWM, 65kHz, Po=28W (650V/1.9Ω)	A
BM2P016-Z	ROHM Co., Ltd.	STR6A153MVD Stock	DIP8 (Pin 6 Removed)	PWM, 65kHz, Po=28W (650V/1.9Ω)	A
BM2P0161-Z	ROHM Co., Ltd.	STR3A455D Stock	DIP8	PWM, 65kHz, Po=44W (650V/1.1Ω)	A
BM2P0161-ZA	ROHM Co., Ltd.	STR3A453D Stock	DIP8	PWM, 65kHz, Po=35W (650V/1.9Ω)	A
BM2P0161K-Z	ROHM Co., Ltd.	STR3A475HDL Stock	DIP8	PWM, 100kHz, Po=36W (800V/1.7Ω)	B

« < 1 2 3 4 5 ··· 26 > » (items 1 to 10 out of 253) Download(Excel)

***Cross Reference* Special Page**

Important Notes

- All data, illustrations, graphs, tables and any other information included in this document (the "Information") as to Sanken's products listed herein (the "Sanken Products") are current as of the date this document is issued. The Information is subject to any change without notice due to improvement of the Sanken Products, etc. Please make sure to confirm with a Sanken sales representative that the contents set forth in this document reflect the latest revisions before use.
- The Sanken Products are intended for use as components of general purpose electronic equipment or apparatus (such as home appliances, office equipment, telecommunication equipment, measuring equipment, etc.). Prior to use of the Sanken Products, please put your signature, or affix your name and seal, on the specification documents of the Sanken Products and return them to Sanken. When considering use of the Sanken Products for any applications that require higher reliability (such as transportation equipment and its control systems, traffic signal control systems or equipment, disaster/crime alarm systems, various safety devices, etc.), you must contact a Sanken sales representative to discuss the suitability of such use and put your signature, or affix your name and seal, on the specification documents of the Sanken Products and return them to Sanken, prior to the use of the Sanken Products. The Sanken Products are not intended for use in any applications that require extremely high reliability such as: aerospace equipment; nuclear power control systems; and medical equipment or systems, whose failure or malfunction may result in death or serious injury to people, i.e., medical devices in Class III or a higher class as defined by relevant laws of Japan (collectively, the "Specific Applications"). Sanken assumes no liability or responsibility whatsoever for any and all damages and losses that may be suffered by you, users or any third party, resulting from the use of the Sanken Products in the Specific Applications or in manner not in compliance with the instructions set forth herein.
- In the event of using the Sanken Products by either (i) combining other products or materials or both therewith or (ii) physically, chemically or otherwise processing or treating or both the same, you must duly consider all possible risks that may result from all such uses in advance and proceed therewith at your own responsibility.
- Although Sanken is making efforts to enhance the quality and reliability of its products, it is impossible to completely avoid the occurrence of any failure or defect or both in semiconductor products at a certain rate. You must take, at your own responsibility, preventative measures including using a sufficient safety design and confirming safety of any equipment or systems in/for which the Sanken Products are used, upon due consideration of a failure occurrence rate and derating, etc., in order not to cause any human injury or death, fire accident or social harm which may result from any failure or malfunction of the Sanken Products. Please refer to the relevant specification documents and Sanken's official website in relation to derating.
- No anti-radioactive ray design has been adopted for the Sanken Products.
- The circuit constant, operation examples, circuit examples, pattern layout examples, design examples, recommended examples, all information and evaluation results based thereon, etc., described in this document are presented for the sole purpose of reference of use of the Sanken Products.
- Sanken assumes no responsibility whatsoever for any and all damages and losses that may be suffered by you, users or any third party, or any possible infringement of any and all property rights including intellectual property rights and any other rights of you, users or any third party, resulting from the Information.
- No information in this document can be transcribed or copied or both without Sanken's prior written consent.
- Regarding the Information, no license, express, implied or otherwise, is granted hereby under any intellectual property rights and any other rights of Sanken.
- Unless otherwise agreed in writing between Sanken and you, Sanken makes no warranty of any kind, whether express or implied, including, without limitation, any warranty (i) as to the quality or performance of the Sanken Products (such as implied warranty of merchantability, and implied warranty of fitness for a particular purpose or special environment), (ii) that any Sanken Product is delivered free of claims of third parties by way of infringement or the like, (iii) that may arise from course of performance, course of dealing or usage of trade, and (iv) as to the Information (including its accuracy, usefulness, and reliability).
- In the event of using the Sanken Products, you must use the same after carefully examining all applicable environmental laws and regulations that regulate the inclusion or use or both of any particular controlled substances, including, but not limited to, the EU RoHS Directive, so as to be in strict compliance with such applicable laws and regulations.
- You must not use the Sanken Products or the Information for the purpose of any military applications or use, including but not limited to the development of weapons of mass destruction. In the event of exporting the Sanken Products or the Information, or providing them for non-residents, you must comply with all applicable export control laws and regulations in each country including the U.S. Export Administration Regulations (EAR) and the Foreign Exchange and Foreign Trade Act of Japan, and follow the procedures required by such applicable laws and regulations.
- Sanken assumes no responsibility for any troubles, which may occur during the transportation of the Sanken Products including the falling thereof, out of Sanken's distribution network.
- Although Sanken has prepared this document with its due care to pursue the accuracy thereof, Sanken does not warrant that it is error free and Sanken assumes no liability whatsoever for any and all damages and losses which may be suffered by you resulting from any possible errors or omissions in connection with the Information.
- Please refer to our official website in relation to general instructions and directions for using the Sanken Products, and refer to the relevant specification documents in relation to particular precautions when using the Sanken Products.
- All rights and title in and to any specific trademark or tradename belong to Sanken and such original right holder(s).

DSGN-CEZ-16003